LED MACHINE LAMP (Aluminum Housing) – 24W

Surya

Data Sheet

Rev_1

IP65

Specifications

Input Voltage :	24V DC / 110V AC / 230V AC
Wattage	**24W**
Control Gear	Onboard
CRI	82 Typical
Luminaire body	SMD LED strip
No. of LED's	54
LED color	Cool white / 6500K
O/P Power	24W
O/P Current	1.04A
Led Make	Edison / Everlight / Osram
Lumens	2200 Lm
Light View Angle	120 ^{o}
Lamp Housing	Aluminium with Toughen Glass
Fastening	End Brackets
Lamp Weight	Approx. 925 Grams
Avg Life Hours	30,000 Hrs
Cable Length	3 Meters

Features

- Ideal for CNC & SPM Machines
- CE Certified
- Coolant, Water & dust proof hence suitable for wet & dry applications
- Aluminium Housing with Toughened Glass
- 360 degree Adjustable viewing angle
- Excellent Cool Day Light
- Fixed Mounting
- IP 65 grade protection
- Used good quality Aluminium with excellent anti-corrosion and good heat dissipation
- Easily Mountable either Vertically or Horizontally
- Stringently checked on various criterion of performance
- Longer Functional Life

Ordering Code

SMC-CNC-AH-5-1-L	24 VDC	24 W
SMC-CNC-AH-5-2-L	110 VAC	24 W
SMC-CNC-AH-5-3-L	230 VAC	24 W

Dimensional Drawings

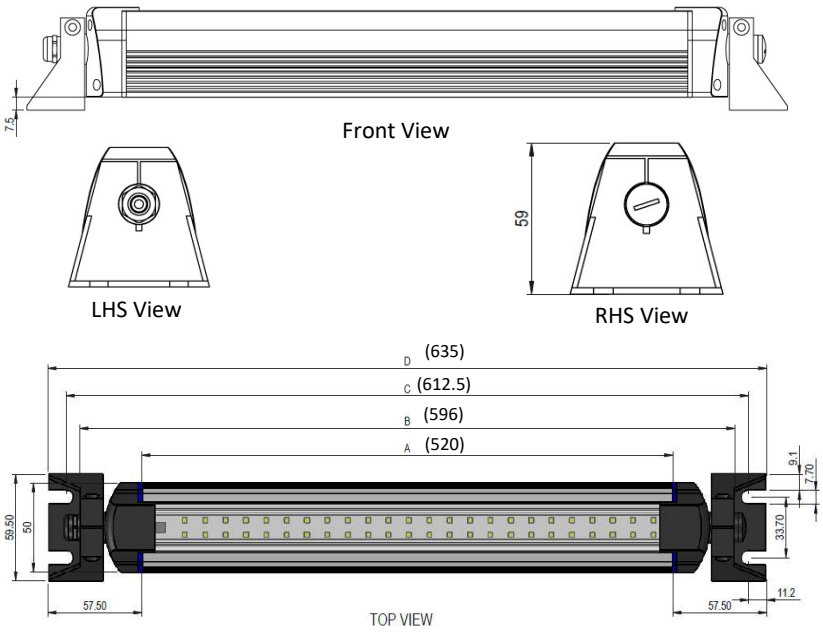

ISO 9001:2015 Certified